TD

Single impeller、單葉輪、Single vapor seal、單軸封

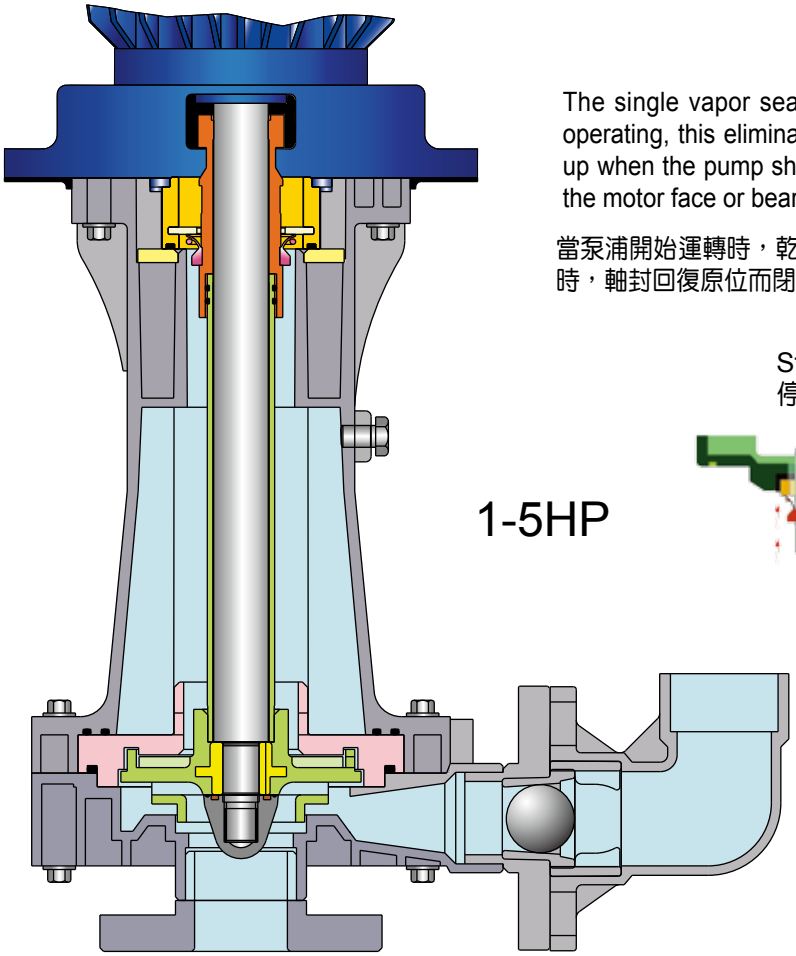

1-5HP

The single vapor seal is opened by centrifugal force when pump is operating, this eliminates friction and seal wear. The seal closes back up when the pump shuts down to prevent vapor or fluid from reaching the motor face or bearings.

當泵浦開始運轉時，乾式軸封因離心力而打開，避免其磨損，泵浦停機時，軸封回復原位而閉鎖，防止酸氣或藥水腐蝕軸承。

Stopped
停機時

Running
運轉中

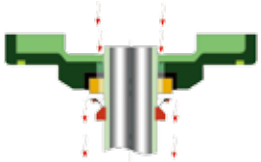

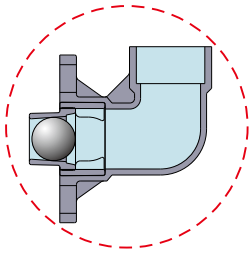

出口逆止彎頭
出口逆止閥獨創設計防止溢流。

Outlet Elbow
Outlet union prevent overflow.

台灣新型第 M 299802 號
中國專利申請中
名稱：化學用直立式幫浦出口管逆止閥結構改良。

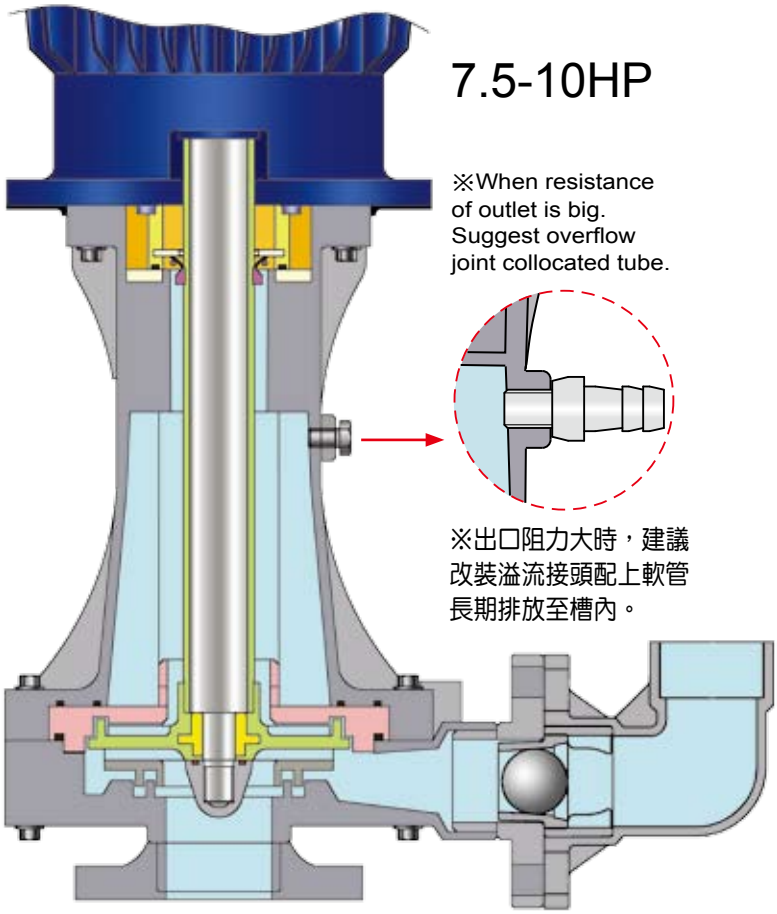

7.5-10HP

※When resistance of outlet is big. Suggest overflow joint collocated tube.

※出口阻力大時，建議改裝溢流接頭配上軟管長期排放至槽內。

Extra diameter impeller enables high pressure discharge. More suitable for frequency 50Hz area or higher pressure applications.

超大型的葉輪外徑，提供源源不絕的高壓力輸出，更適合於電壓50Hz地區，或需求更高壓力之應用場合的需求。

The impeller welded by welding rod may deform or collapse in high temperature, pressure and strong corrosion applications. Embedded design eliminates this problem.

以焊條焊接之葉輪於高溫高壓及高腐蝕力的嚴苛工作條件下，容易變形脫落，嵌入式並多點熱熔的葉輪一舉克服此一缺點。

Brand-new replaceable rear cover may save much cost while the pump head need to be replaced or changed material.

全新的可換後蓋設計，於更換泵體材質時，不需更換整個主體，或於主體損壞時， 可能僅需更換可換後蓋即可，大量地節省維修費用，且防漏效果更佳。